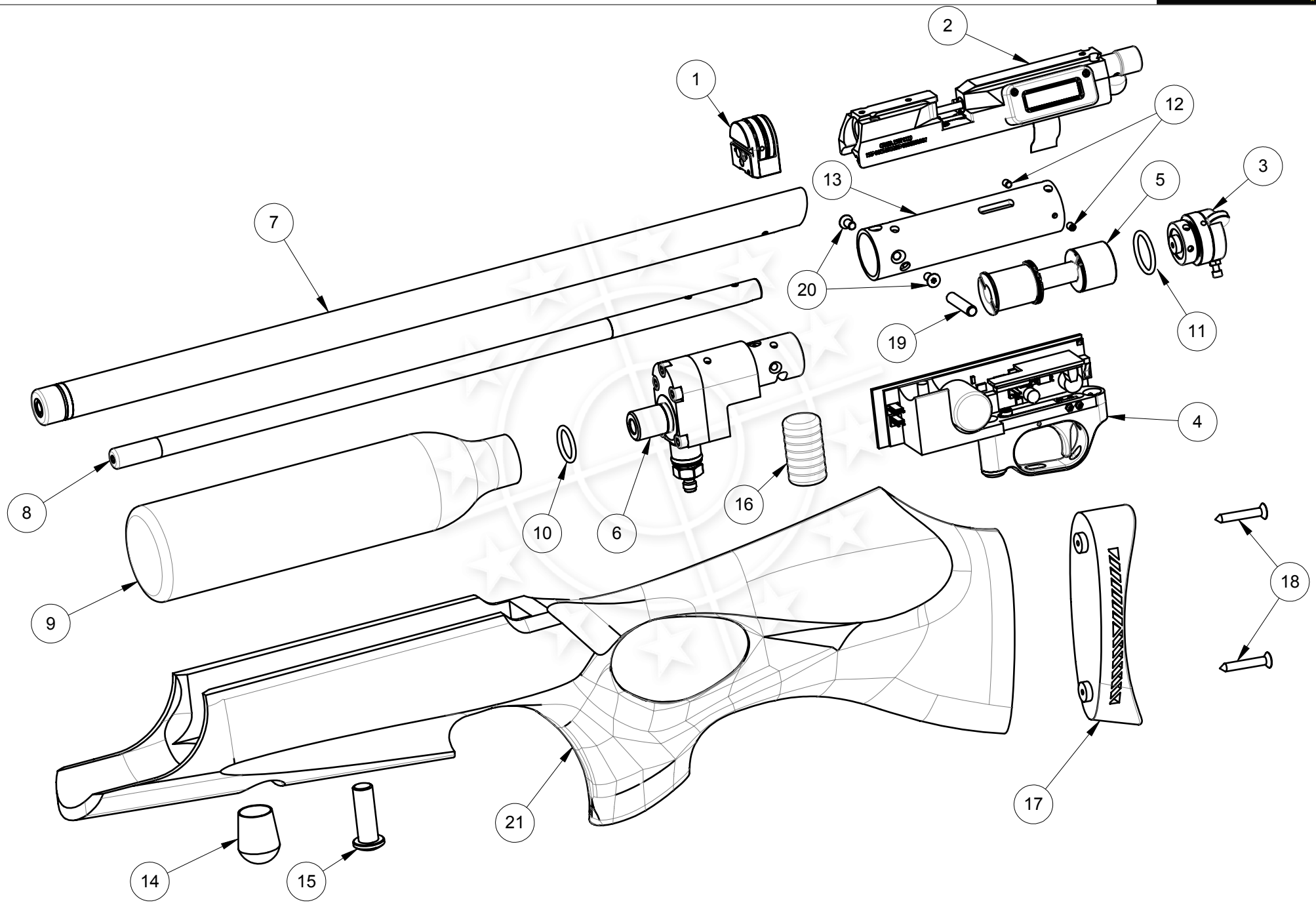AIR WOLF GENERAL ASSEMBLY